적 용 규 격
SPECIFICATION APPLIED

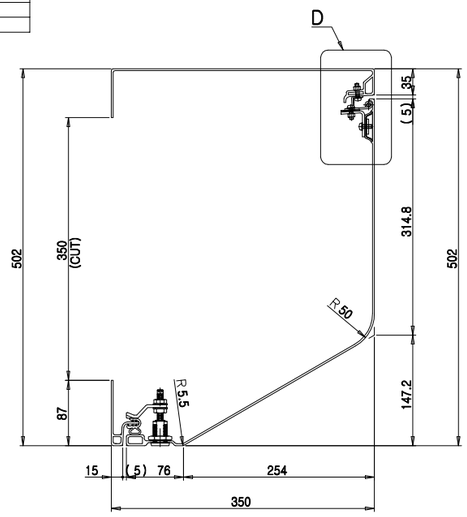

SECTION B-B

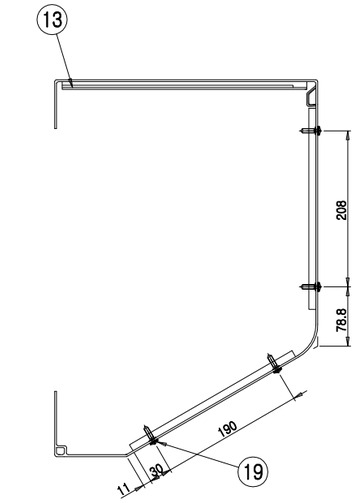

SECTION C-C

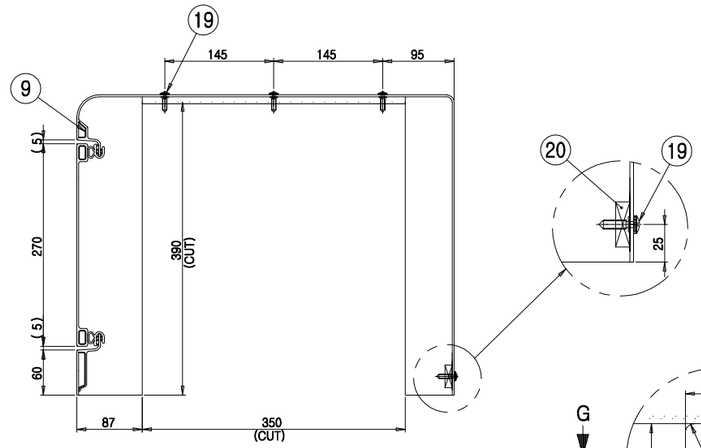

SECTION A-A

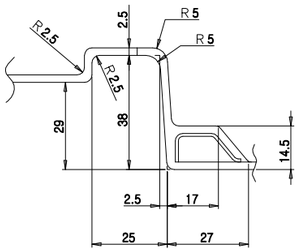

SECTION G-G
SCALE=1/1

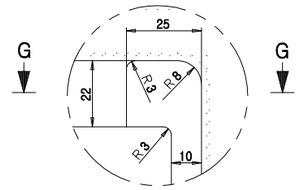

DETAIL F
SCALE=1/1

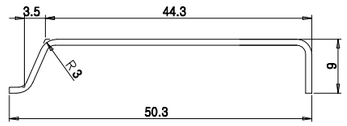

DETAIL 13
SCALE=2/1

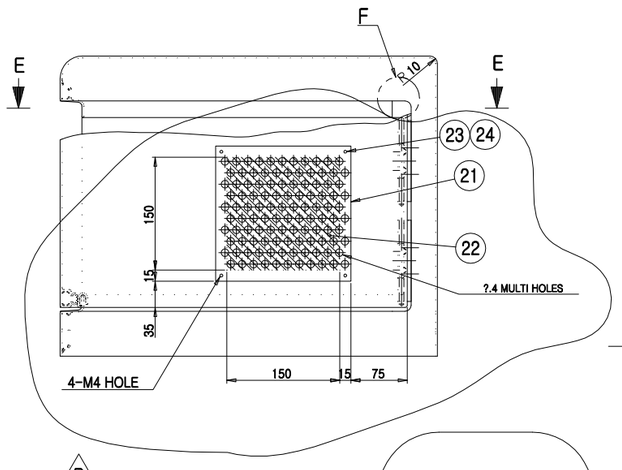

DETAIL 11
SCALE=2/1

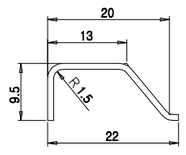

DETAIL 9,10
SCALE=2/1

B

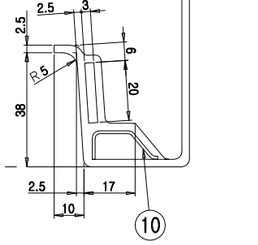

SECTION E-E
SCALE=1/1

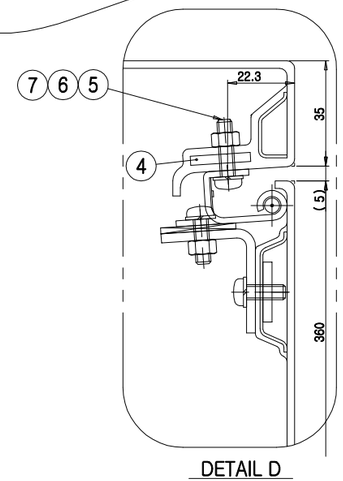

DETAIL D
SCALE=1/1

NOTE
1. UNDIRECTED CORNER RADIUSES SHOULD BE APPLIED BY R=2.5mm.
2. SHALL BE SAME COLOR AS INTERIOR PANEL.

NO.	PART NO.	DESCRIPTION	MATERIAL	Q'TY	W.T	REMARKS
24	RS60401-005S	NUT,HEX	SUS304	4		M4
23	RS60116-022S	BLOT, HEX HEAD, FLANGE	SUS304	4		M4X10
22	RFA25013AN0-022	SPONGE, OPEN CELL	SPONGE	1		150X150X5T
21	RFA25013AN0-021	PLATE, PERFORATION	SUS304	1		180X180X1.5T
20	RFA25013AN0-020	PACKING	NEOPRENE	1		T9.5X30X870 (WITH DUAL TAPE)
19	RFP57007AN0-400	SCREW,KNOB	ASSY	7		COHAMA,A-M5-01S
18						
17						
16						
15						
14						
13	RFA25013AN0-013	STIFFERNER	A1050P	1		T1,L=325.5
12				1		
11	RFA25013AN0-011	STIFFERNER	A1050P	1		T1,L=280
10	RFA25013AN0-010	STIFFERNER	A1050P	1		T1,L=280
9	RFA25013AN0-009	STIFFERNER	A1050P	1		T1,L=840
8						
7	RS60401-006S	NUT,HEX	SUS304	4		M5
6	RS60801-005S	WASHER,SPRING	SUS304	4		M5
5	RS60606-149S	SCREW,P.H	SUS304	4		M5X20
4	RFA25013AN0-004	SEAT,TAP	SUS304	2		T3X20X80
3	RFA25013AN0-003	RUBBER,WATHER STRIP	ASSY	1		RFP57021AN0,L=1944
2	RFA25014AN0	COVER,INSPECTION	ASSY	1		
1	RFA25013AN0-001	PANEL	FRP	1		T2.5

승인 APP	재질 MAT'L	명 칭 TITLE	FAN,COVER,ASSY
검도 CHK	중량량 G. W		
설계 DGN	일 반 공 차 MC WD CT	도면 번호 DRG. NO	RFA25013AN0 Ver. 00 Rev. -B
제도 DRG	B	SCALE 1/4	매수 SHEET 1 of 1
	SIZE A1	표면처 REF. NO.	HYUNDAI Rotem 현대로템주식회사

기호 MARK	일자 DATE	변경내역 DETAIL OF REVISION(E.C ZONE)	설변번호 E.C NO.	설계 DGN	검도 CHK	승인 APP
BX2	2016.02.24	ADD HOLE&PERFORATION PLATE	RSD1402-U178	H.J.LEE	B.S.LEE	H.G.RYU
AX4	2009.07.01	CHANGED SHAPE.	305101-U055	B.S.YOO	H.S.KIM	H.G.RYU

일반공차 GENERAL TOLERANCE			
주조 CASTING	~ 40	2	4
	~ 90	2	3
	~ 10	1	1.5
	< 3	0.5	1
절삭 MACHINING	~ 3150	-	7
	~ 1600	4	5
	~ 800	3	4
	~ 400	2	3
	~ 200	1.5	2
	~ 100	1	1.5
등급 GRADE		A	B
주조 구분용 CASTING (±)			
~ 25M		9	14	24
~ 15M		7	12	21
~ 10M		6	10	18
~ 6M		5	8	14
~ 4M		4	6	11
~ 2M		3	4	6
~ 1M		2	3	6
~ 315		1	2	4
~ 100		1	2	3
~ 30		1	1	1
등급 GRADE		A	B	C
용접 구분용 WELDING (±)			
~ 25M		-	6.0	8.0
~ 15M		-	5.0	7.0
~ 10M		-	4.0	6.0
~ 6M		-	3.0	5.0
~ 4M		0.8	2.0	4.0
~ 2M		0.5	1.2	3.0
~ 1M		0.3	0.8	2.0
~ 315		0.2	0.5	1.2
~ 120		0.15	0.3	0.8
~ 30		0.1	0.2	0.5
1 ~ 6		0.05	0.1	0.2
등급 GRADE		A	B	C
기계 가공용 MACHINING (±)			
규정치없은 일반공차표 GENERAL TOLERANCE			

본 도면은 당사 재산으로서 허가없이 무단복제/배포 금지함. PROPERTY OF ISSUING ENTITY. CANNOT BE DISTRIBUTED OR REPRODUCED WITHOUT AUTHORIZATION.

CATIA